JohnsonSuisse
Bathroom Solutions

Bergamo Square Wall Hung WC

Fixing kit: Not included
Flushing system: Washdown
Installation type: Wall-hung
Outlet type: Horizontal
P-Trap Set Out (mm): 240
Quick installation
Rim type: Closed
Shape: Square
Style: Neutral

Dimensions

Length: 515 mm.
Width: 355 mm.
Height: 360 mm.

Compatible with

WBTS800123WW Bergamo Square Soft Close Seat & Cover

Technical drawings

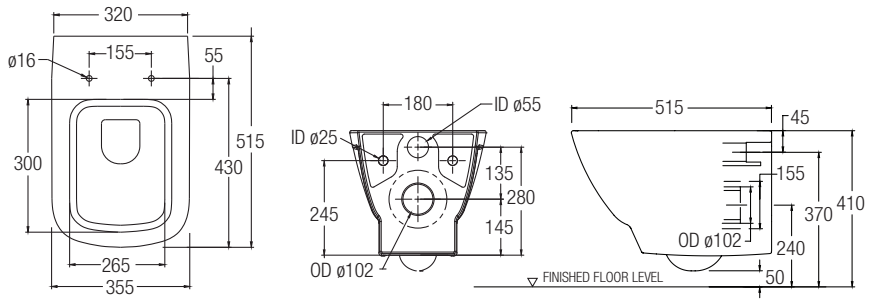

Copyright JohnsonSuisse 2017

Copyright JohnsonSuisse 2017